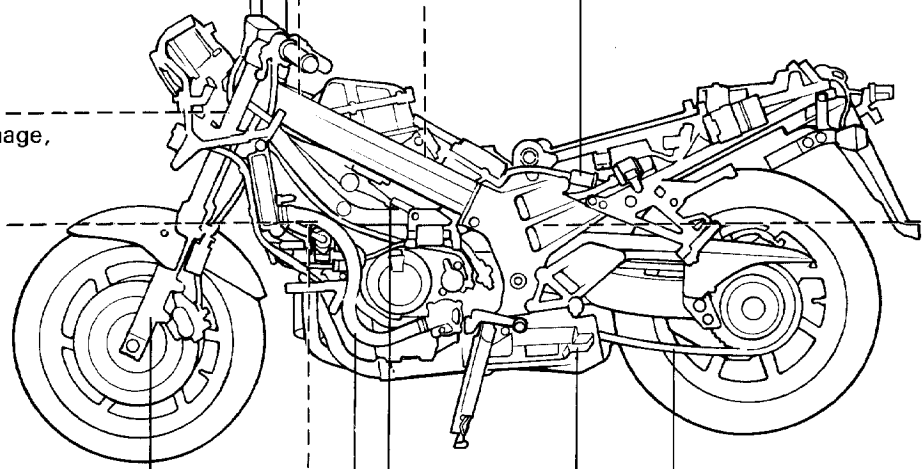
(1) Carburetor Choke (Operation)
(2) Clutch lever (Free play)
(3) Clutch master cylinder (Level check, fluid replacement)
(4) EVAP CAV control valve/ EVAP purge control valve (Damage, faulty hose) [California only]
(5) Fuel Filter (clogging) Fuel Line (Damage, leakage)
(6) Suspension (Loose, wear, damage)
(7) Drive Chain (Free play, lubrication, replacement)
(8) Side Stand (page 3-15)
(9) Throttle Stop Screw (Idle speed)
(10) Radiator Hose (Leakage, degradation, damage)
(11) Spark Plug (Wear, damage, coloration)
(12) Suspension (Loose, wear, damage)
(13) Valve Clearance (page 3-7)
(14) Steering Head Bearings (Damage, Lubrication)