After '93:
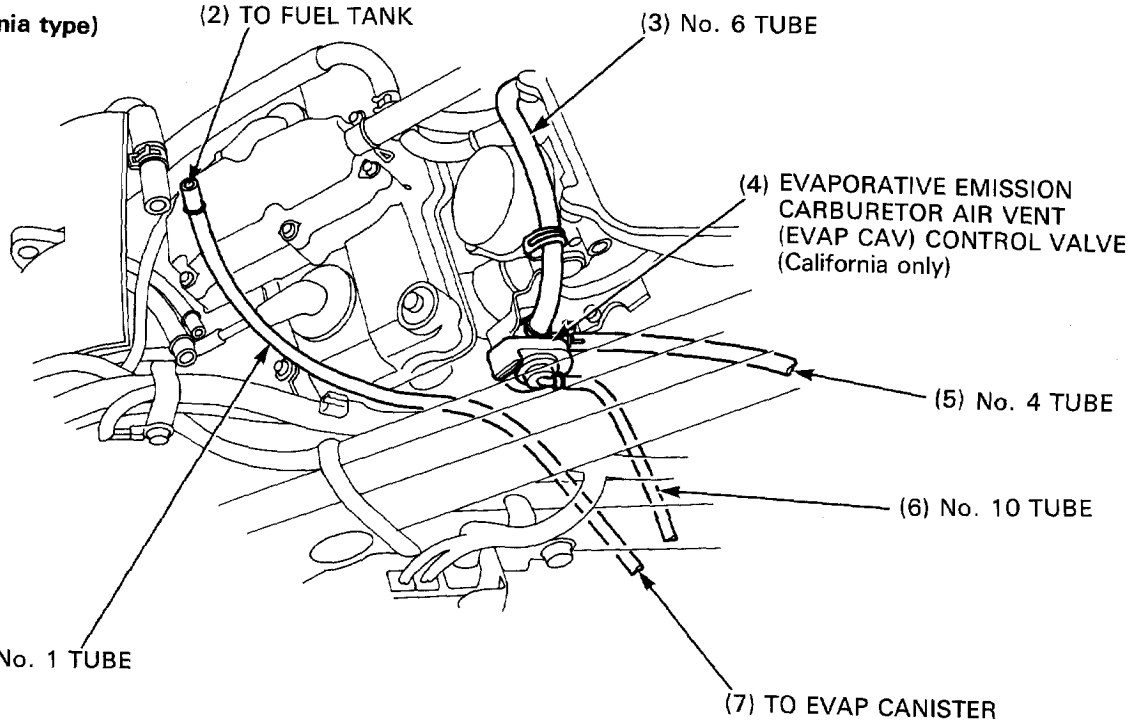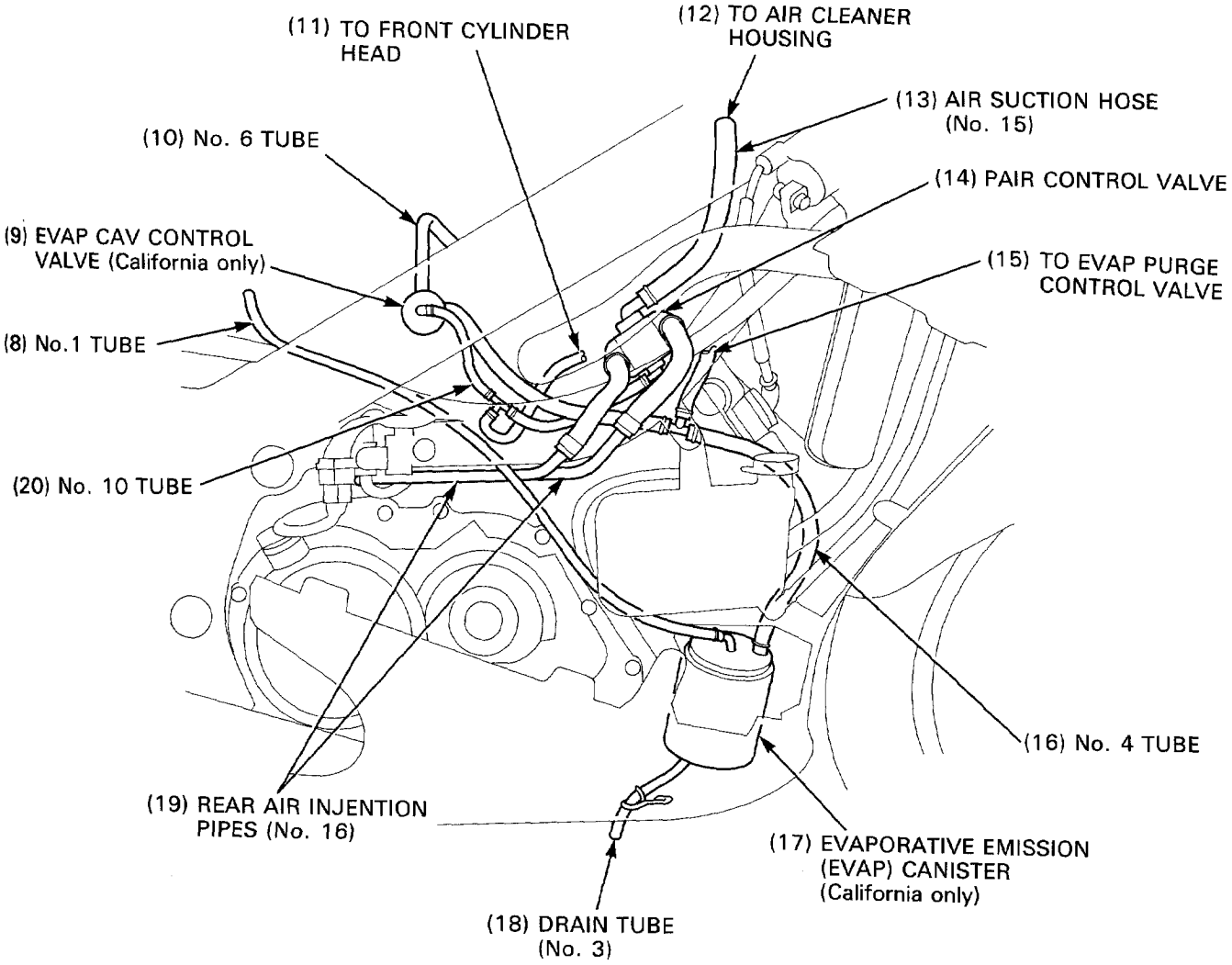
(49 state/California type)