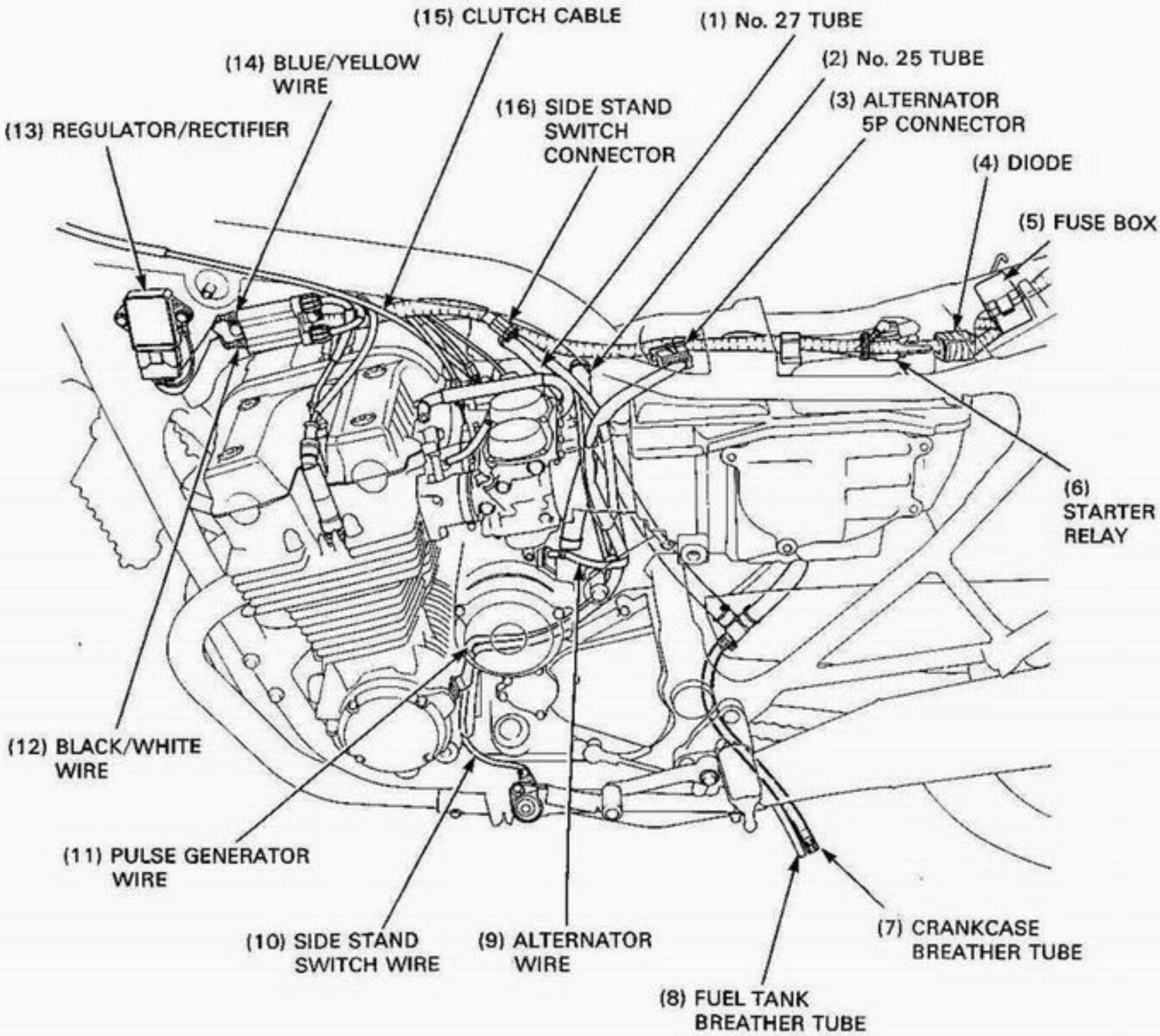
(15) CLUTCH CABLE
(1) No. 27 TUBE
(14) BLUE/YELLOW WIRE
(2) No. 25 TUBE
(16) SIDE STAND SWITCH CONNECTOR
(3) ALTERNATOR 5P CONNECTOR
(13) REGULATOR/RECTIFIER
(4) DIODE
(5) FUSE BOX
(6) STARTER RELAY
(12) BLACK/WHITE WIRE
(11) PULSE GENERATOR WIRE
(10) SIDE STAND SWITCH WIRE
(9) ALTERNATOR WIRE
(7) CRANKCASE BREATHER TUBE
(8) FUEL TANK BREATHER TUBE

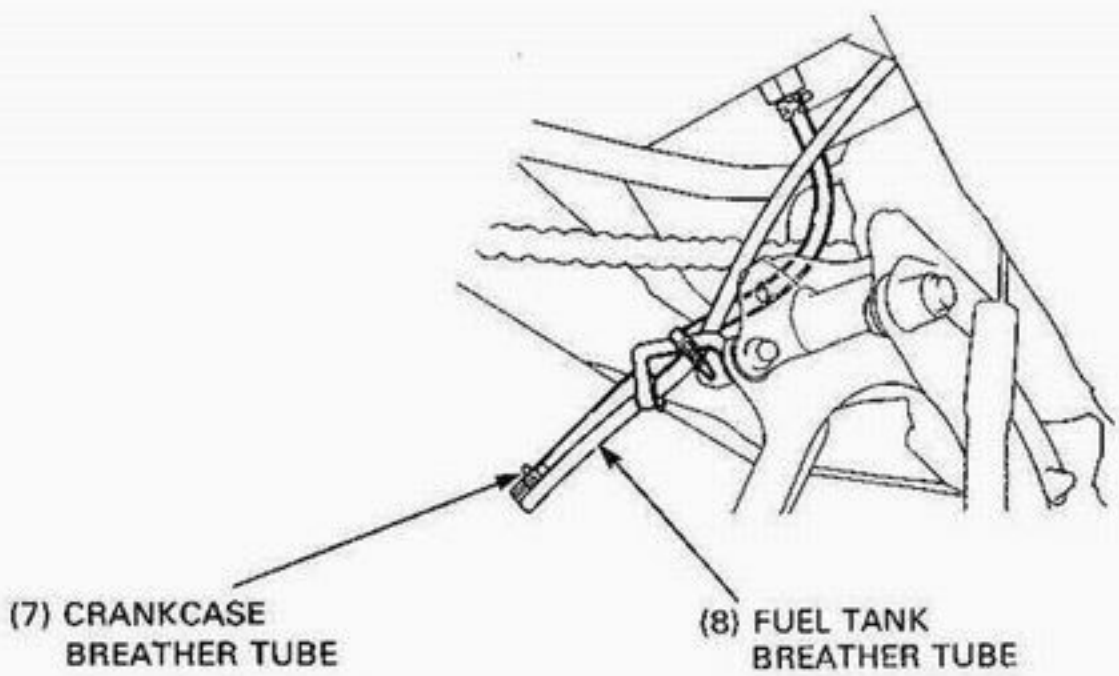
(7) CRANKCASE BREATHER TUBE
(8) FUEL TANK BREATHER TUBE