E 13

# F-7

## Front fork

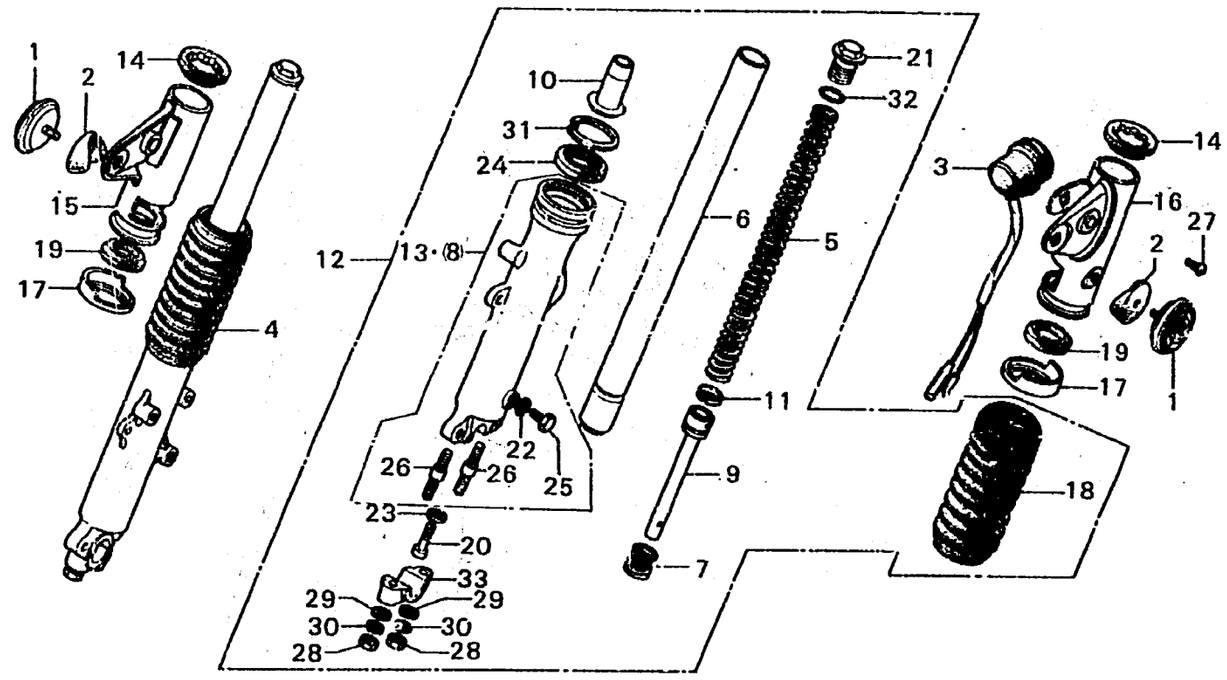


| Service item | F.R.T. | Ref. No. | Part No. | Description | Reqd. No. CB750K6 | Serial No. | Area code |
|---|---|---|---|---|---|---|---|
| | | 26 | 92700-08050-30 | BOLT, STUD, 8X50 | 4 | | |
| | | 27 | 93500-06006-02 | SCREW, PAN, 6X6 | 2 | | F |
| | | 28 | 94030-08000 | NUT, HEX., 8MM | 4 | | |
| | | 29 | 94101-08000 | WASHER, PLAIN, 8MM | 4 | | |
| | | 30 | 94111-08000 | WASHER, SPRING, 8MM | 4 | | |
| | | 31 | 94521-48000 | CIR CLIP, INTERNAL, 48 | 2 | | |
| | | 32 | 94608-50000 | O-RING, 23X2.8 | 2 | | |
| | | 33 | 95014-41000 | HOLDER 10, FR. FORK AXLE | 2 | | |

1978.02.20 F-7



E 13