STAND

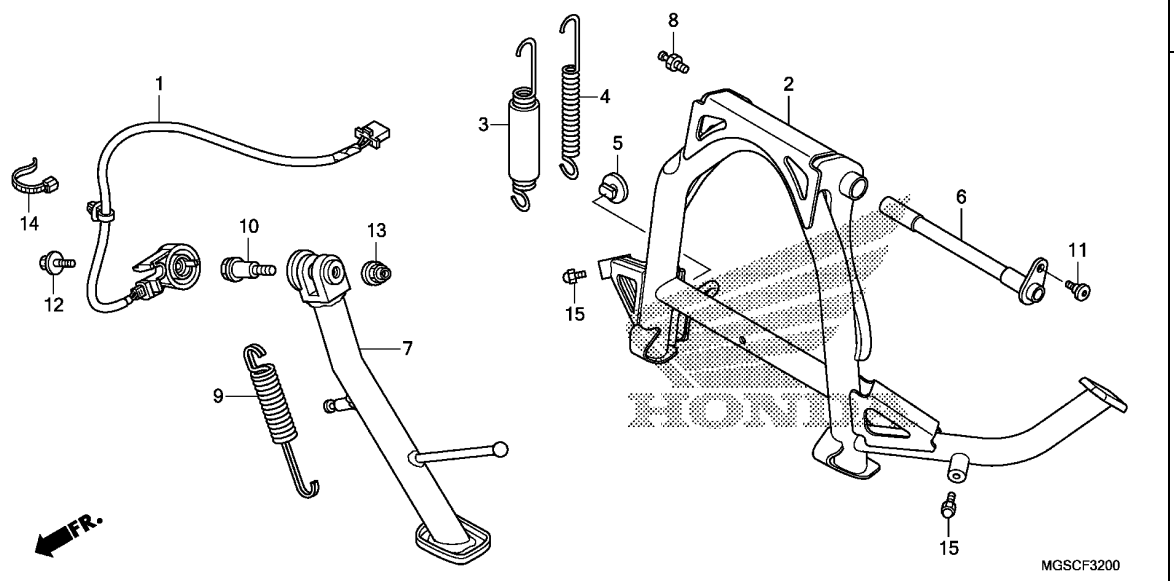

Ref. No.	L.O.N.	(Relative ref. Number) Description	F.R.T.
1	615195	SWITCH, SIDE STAND ----------	1.2
2		(6)	
	410175	STAND, MAIN ----------	0.4
3		(4)	
	410176	SPRING, MAIN STAND ----------	0.2
		.NOTE: Same time for two units	
7	410180	BAR, SIDE STAND ----------	0.2
9	410182	SPRING, SIDE STAND ----------	0.1

Ref. No.	Part No.	Description	Reqd. QTY NC700D C	Serial No.	Parts catalogue code
1	35700-MGS-D70	SWITCH ASSY., SIDE STAND ----	1		
2	50500-MGS-D70	STAND COMP., MAIN ----------	1		
3	50520-MGS-D70	SPRING ASSY., MAIN STAND ----	1		
4	50523-MGS-D70	SUB SPRING, MAIN STAND ------	1		
5	50524-MN8-000	RUBBER, STAND STOPPER -------	1		
6	50526-MGS-D70	PIPE, MAIN STAND PIVOT ------	1		
7	50530-MGS-D70	BAR COMP., SIDE STAND -------	1		
8	50538-MGS-D70	HOOK, MAIN STAND SPRING -----	1		
9	50540-MFL-000	SPRING, SIDE STAND ----------	1		
10	90108-MK6-670	BOLT, SIDE STAND PIVOT ------	1		
11	90114-MAC-780	BOLT, FR. DISK COVER --------	1		
12	90147-MCE-950	BOLT, SPECIAL, 6X16 ---------	1		
13	90203-MF9-710	NUT, SIDE STAND ------------	1		
14	90650-KV6-003	BAND, WIRE, 95MM ----------	1		
15	92501-06010-0G	BOLT, CAP, 6X10 ----------	2		