OIL PAN/OIL PUMP

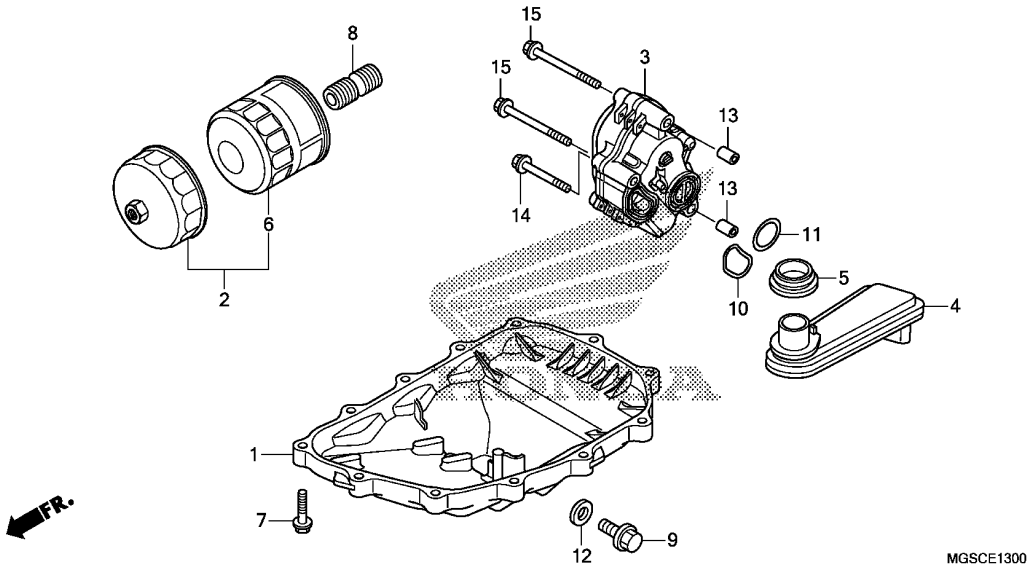

Ref. No.	L.O.N.	(Relative ref. Number) Description	F.R.T.
1	113145	OIL PAN AND/OR GASKET	0.7
3		(10,11)	
	113105	PUMP ASSY., OIL	1.7
4		(5)	
	1131B6	STRAINER, OIL	0.7
6		(2)	
	113180	CARTRIDGE, OIL FILTER	0.2

Ref. No.	Part No.	Description	Reqd. QTY NC700D C	Serial No.	Parts catalogue code
1	11210-MGS-D20	PAN, OIL	1		
2	15010-MCE-H51	FILTER SET, OIL	(1)		
3	15100-MGS-D20	PUMP ASSY., OIL	1		
4	15150-MGS-D30	STRAINER COMP., OIL	1		
5	15154-MAT-000	PACKING, OIL STRAINER	1		
6	15410-MFJ-D01	CARTRIDGE, OIL FILTER (TOYO ROKI)	1		
7	90006-GHB-680	BOLT, FLANGE, 6X28(NSHF)	12		
8	90019-MB0-000	BOSS, OIL FILTER	1		
9	90131-883-000	BOLT, DRAIN PLUG, 12X15	1		
10	91301-MEE-003	O-RING, 32X1.7	1		
11	91307-PY4-003	O-RING, 24.5X1.9	1		
12	94109-12000	WASHER, DRAIN PLUG, 12MM	1		
13	94301-08140	DOWEL PIN, 8X14	2		
14	95701-06055-00	BOLT, FLANGE, 6X55	1		
15	95701-06075-00	BOLT, FLANGE, 6X75	2		