E-5 CAM CHAIN/TENSIONER

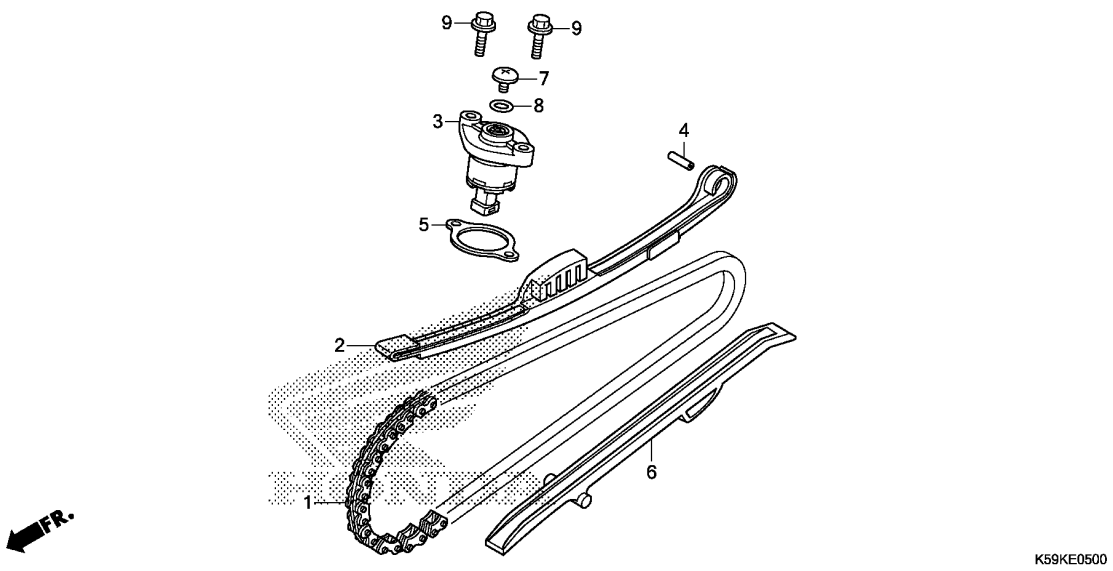

Ref. No.	L.O.N.	(Relative ref. Number) Description	F.R.T.
1	110140	CHAIN, CAM ----------	3.7
		.INCLUDES: Engine removal and installation	
2	111130	TENSIONER, CAM CHAIN ---------	3.7
		.INCLUDES: Engine removal and installation	
3		(5)	
	111133	LIFTER, TENSIONER ----------	0.7
6	111139	GUIDE, CAM CHAIN ----------	3.2
		.INCLUDES: Engine removal and installation	

Ref. No.	Part No.	Description	Reqd. QTY ACB150 CBT K	Serial No.	Parts catalogue code
1	14401-K97-T01	CHAIN, CAM (DID SCZ-0404 SV-92LE)	1		
2	14510-KZR-600	TENSIONER ASSY., CAM CHAIN --	1		
3	14520-K40-F01	LIFTER ASSY., TENSIONER -----	1		
4	14531-KZR-600	PIVOT, CAM CHAIN TENSIONER --	1		
5	14560-KZR-600	GASKET, TENSIONER LIFTER ----	1		
6	14611-K97-T00	GUIDE, CAM CHAIN ----------	1		
7	90005-KY7-000	SCREW, PAN, 6X6 ----------	1		
8	91306-MG3-000	O-RING, 1.5X9.5 ----------	1		
9	95701-06022-00	BOLT, FLANGE, 6X22 ----------	2		