E - 8

CRANKSHAFT • PISTON

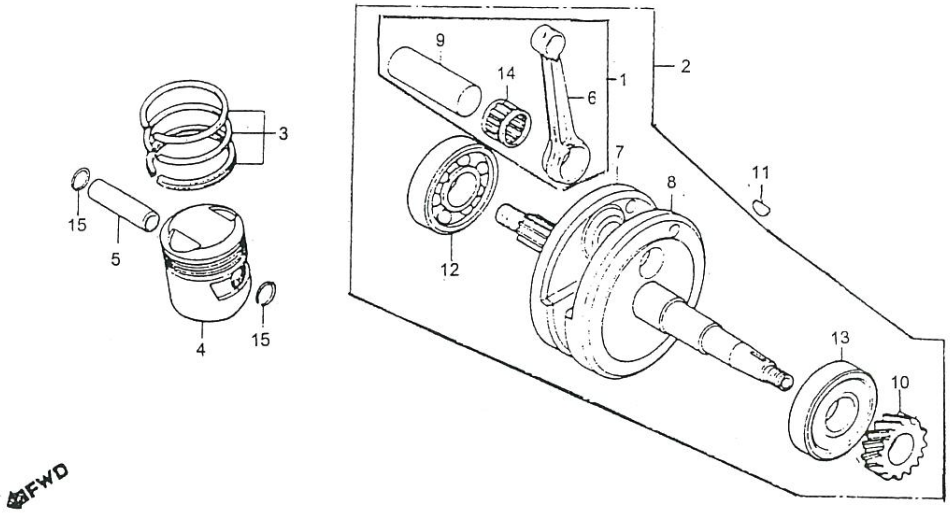

Service item	F.R.T.
CRANKSHAFT COMP.	•3.9
RING SET, PISTON	1.9
•PISTON	
PIN, PISTON	1.8
ROD. CONNECTING ..... (ACTUAL TIME)	
(INC. RELATIVE PART)	
BEARING, RADIAL BALL,	•4.1
(ADD. 0.2 FOR EACH.)	

REF. NO.	PART NO.	DESCRIPTION	REQ'D. NO. OLD	REQ'D. NO. NEW
1	06381-437-505	CON. ROD	-	1
2	13000-KCS-770	CRANKSHAFT ASSY.	-	1
	13000-397-305	CRANKSHAFT ASSY.	1	1
3	13011-383-621	RING SET PISTON (0.25)	1	1
	13021-383-621	RING SET PISTON (0.50)	1	1
	13031-383-621	RING SET PISTON (0.75)	1	1
	13041-383-621	RING SET PISTON (1.00)	1	1
4	13101-383-040	PISTON	1	1
	13101-383-003	PISTON	1	1
	13101-383-010	PISTON (0.25)	1	1
	13102-383-010	PISTON (0.25)	1	1
	13102-383-003	PISTON (0.50)	1	1
	13103-383-010	PISTON (0.50)	1	1
	13104-383-003	PISTON (0.75)	1	1
	13104-383-010	PISTON (0.75)	1	1
	13105-383-003	PISTON (1.00)	1	1
	13105-383-010	PISTON (1.00)	1	1
5	13111-440-000	PISTON PIN		1
6	13201-383-310	ROD CONNECTING	-	1
7	13311-KCS-650	CRANKSHAFT R.	-	1
8	13321-KCS-650	CRANSHAFT L.	-	1
9	13381-KCS-650	PIN CRANK	-	1
10	14311-KE2-940	GEAR TIMING DRIVE	-	1

REF. NO.	PART NO.	DESCRIPTION	REQ'D. NO. OLD	REQ'D. NO. NEW
11	90741-KFB-000	KEY WOODRUFF, 4MM	1	-
12	91001-KC6-961	BEARING RADIAL BALL 28X72X18	-	1
13	91002-KCS-651	BEARING RADIAL BALL 28X72X18	-	1
14	91002-383-003	BEARING CONNECTING LARGE END	1	-
	91002-440-003	RED (TOYO)		
	91003-440-003	BEARING A, CONNECTING ROD		
	91004-440-003	BEARING B, CONNECTING ROD		1
		BEARING C, CONNECTING ROD		1
15	94601-15000	CLIP, PISTON PIN 15MM	2	2