STEERING STEM

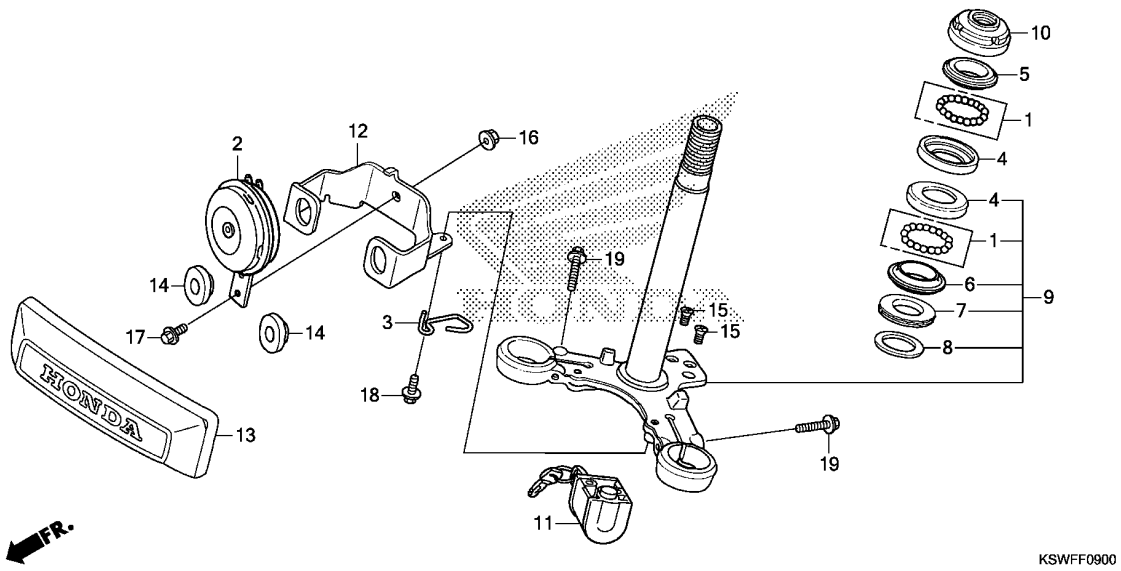

Ref. No.	L.O.N.	(Relative ref. Number) Description	F.R.T.
2	616169	HORN ----------	0.1
4		(1)	
	5101A0	RACE, STEERING BALL :UPPER ---	1.0
	5101A1	RACE, STEERING BALL :LOWER ---	1.0
	5101C9	RACE, STEERING BALL :BOTH ----	1.0
5	5101A9	RACE, STEERING TOP CONE ------	0.5
6		(1,7)	
	5101B0	RACE, STEERING BOTTOM CONE ---	1.1
9	510100	STEM OR SHAFT ASSY., STEERING	1.0
10	5101B2	THREAD, STEERING HEAD TOP ----	0.5
11	615147	LOCK, STEERING ----------	0.1
12	6161Q2	STAY, HORN ----------	0.2

Ref. No.	Part No.	Description	Reqd. QTY CCG 125WH F	Serial No.	Parts catalogue code
1	06530-KRF-H70	BALL ASSY., STEEL, #6X21 ----	2		
2	38110-KSW-G01	HORN ASSY.(HIGH) ----------	1		
3	45465-KCS-W20	GUIDE, BRAKE CABLE ----------	1		
4	50301-KCS-W60	RACE, STEERING BALL ---------	2		
5	53211-KCS-W60	RACE, STEERING TOP CONE -----	1		
6	53212-KCS-W60	RACE, STEERING BOTTOM CONE --	1		
7	53214-001-010	DUST SEAL, STEERING HEAD ----	1		
8	53215-001-000	WASHER, STEERING HEAD DUST SEAL	1		
9	53219-KSW-970	STEM SUB ASSY., STEERING ----	1		
10	53220-074-000	THREAD COMP., STEERING HEAD TOP	1		
11	53600-KFJ-911	LOCK, STEERING HANDLE -------	1		
12	61312-KCS-V60	STAY, HORN ----------	1		
13	61401-KCS-W60	COVER, FR. ----------	1		
14	83542-KPN-900	GROMMET, SIDE COVER ---------	2		
15	90164-028-000	SCREW, U-LOCK FLAT, 6X12 ----	2		
16	94050-06020	NUT, FLANGE, 6MM ----------	1		
17	95701-06012-02	BOLT, FLANGE, 6X12 ----------	1		
18	95701-06016-00	BOLT, FLANGE, 6X16 ----------	2		
19	95801-08032-00	BOLT, FLANGE, 8X32 ----------	2		