C 9

# E-6

## Oil pump · Filter rotor

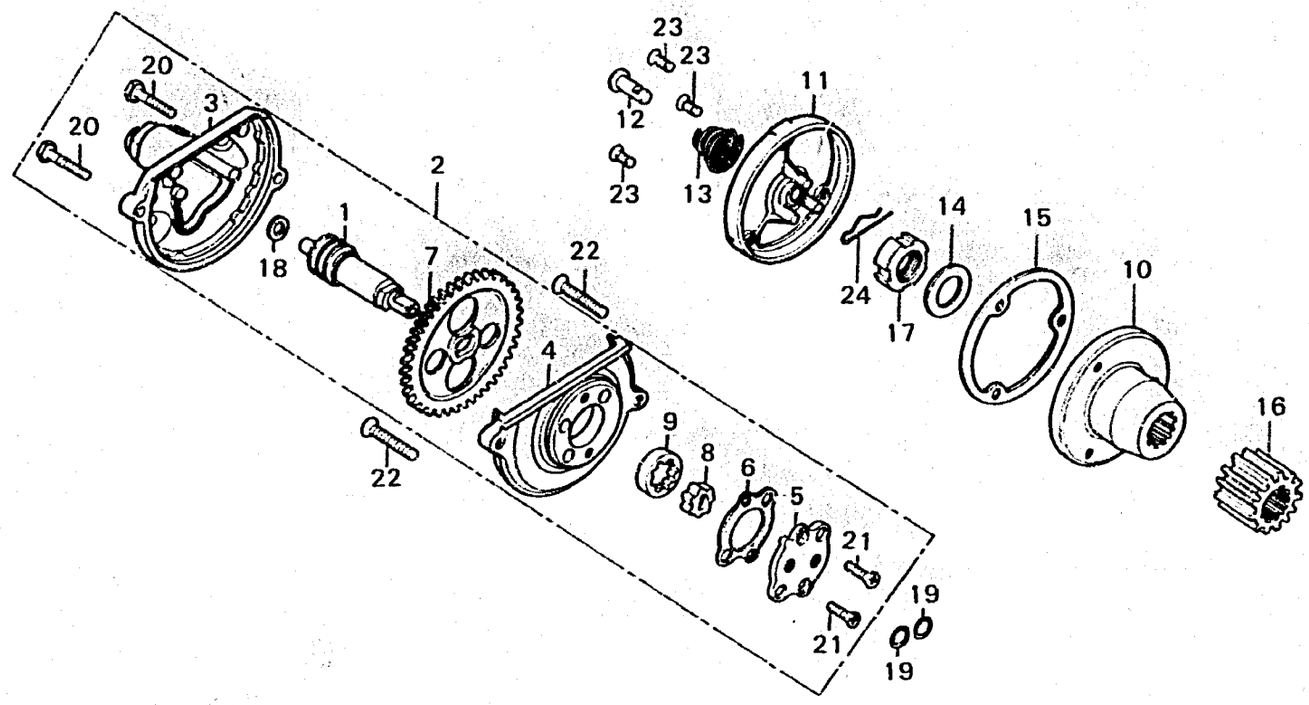


B383-38

| Service item | F.R.T. |
|---|---|
| OIL PUMP ASSY. and its related parts. | 0.7 |
| ●OIL FILTER ROTOR COMP. and its related parts. | |
| OIL PUMP GEAR COVER/ TACHOMETER PINION GEAR | 0.6 |
| ●OIL FILTER ROTOR CAP and its related parts. | |

| Ref. No. | Part No. | Description | Reqd. No. CB125S2 | Serial No. | Area code |
|---|---|---|---|---|---|
| 1 | 12421-365-000 | GEAR, TACHOMETER PINION | 1 | | |
| 2 | 15100-365-000 | PUMP ASSY., OIL | 1 | | |
| 3 | 15106-324-020 | COVER, OIL PUMP GEAR | 1 | | |
| 4 | 15111-365-000 | BODY, OIL PUMP | 1 | 2071863 | D1K,D1M,D3K,D3M |
| | | | 1 | | D6K |
| | 15111-437-000 | BODY, OIL PUMP | 1 | 2071864 | D1K,D1M,D3K,D3M |
| 5 | 15116-107-020 | PLATE, OIL PUMP | 1 | | |
| 6 | 15126-107-020 | GASKET, OIL PUMP | 1 | | |
| 7 | 15131-324-010 | GEAR, OIL PUMP DRIVE (39T) | 1 | | |
| 8 | 15331-921-003 | ROTOR, OIL PUMP INNER (YAMADA) | 1 | | |
| 9 | 15332-921-003 | ROTOR, OIL PUMP OUTER (YAMADA) | 1 | | |
| 10 | 15430-383-000 | ROTOR COMP., OIL FILTER | 1 | 2072023 | D1K,D1M,D3K,D3M |
| | | | 1 | | D6K |
| | 15430-440-000 | ROTOR COMP., OIL FILTER | 1 | 2072024 | D1K,D1M,D3K,D3M |
| 11 | 15436-107-000 | CAP, OIL FILTER ROTOR | 1 | | |
| 12 | 15441-107-000 | THROUGH, OIL | 1 | | |
| 13 | 15446-107-000 | SPRING, OIL THROUGH | 1 | | |
| 14 | 15451-107-000 | WASHER, OIL FILTER ROTOR LOCKING | 1 | | |
| 15 | 15459-107-000 | GASKET, OIL FILTER ROTOR CAP | 1 | | |
| 16 | 23121-383-000 | GEAR, PRIMARY DRIVE (18T) | 1 | | |
| 17 | 90231-107-000 | NUT, LOCK, 16MM | 1 | | |
| 18 | 90443-844-000 | WASHER, THRUST, 8MM | 1 | | |
| 19 | 91304-107-000 | O-RING, 9.4X2.4 | 2 | | |
| 20 | 92000-05020-0A | BOLT, HEX., 5X20 | 2 | | D6K |
| | | | 2 | 2071863 | D1K,D1M,D3K,D3M |
| | 92000-05020-0H | BOLT,HEX., 5x20 | 2 | 2071864 | D1K,D1M,D3K,D3M |
| 21 | 93600-04012-0A | SCREW, FLAT, 4X12 | 2 | | |

1979.03.01 C9