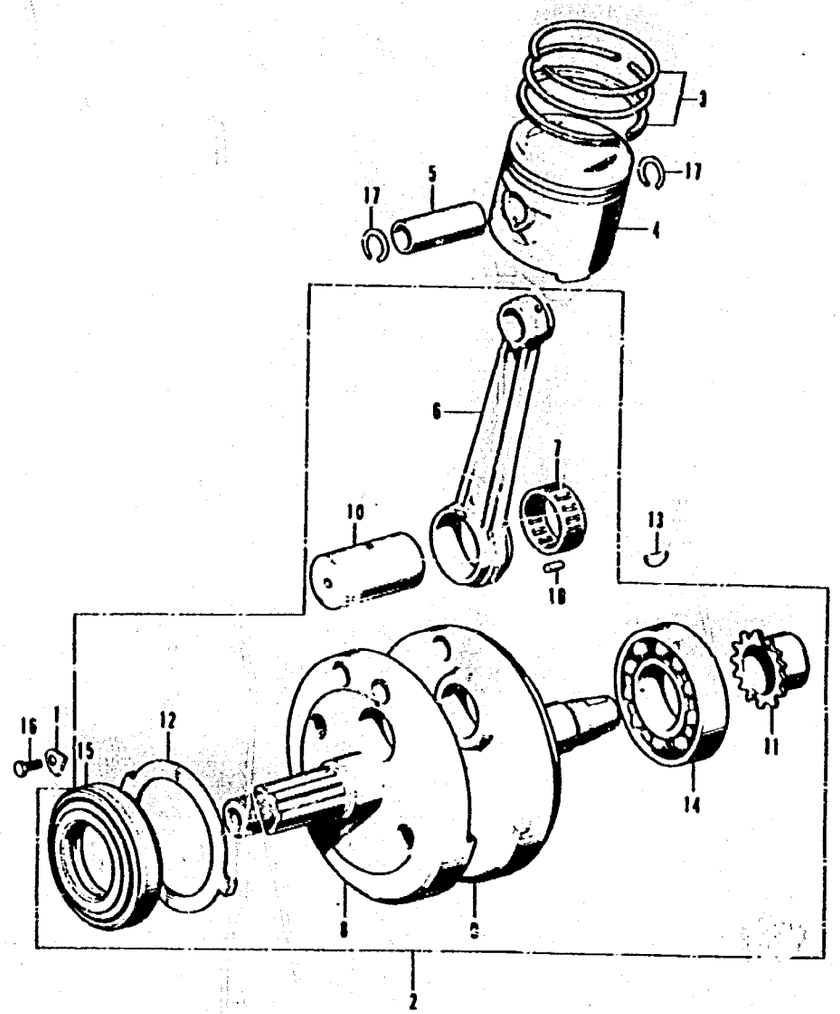

331-2
B110-56

Ref. No.	Part No.	Description	Reqd. No. CB125S1	Serial No.	Area Code
1	11112-107-760	PLATE, BEARING SET	1		
2	13000-331-770	CRANKSHAFT ASSY.	1		
3	13011-330-005	RING SET, PISTON (STD.TEIKOKU)	1		
	13021-330-005	RING SET, PISTON (0.25TEIKOKU)	1		
	13031-330-005	RING SET, PISTON (0.50TEIKOKU)	1		
	13041-330-005	RING SET, PISTON (0.75TEIKOKU)	1		
	13051-330-005	RING SET, PISTON (1.00TEIKOKU)	1		
4	13101-330-000	PISTON (STD.)	1		
	13102-330-000	PISTON (0.25)	1		
	13103-330-000	PISTON (0.50)	1		
	13104-330-000	PISTON (0.75)	1		
	13105-330-000	PISTON (1.00)	1		
5	13111-286-000	PIN, PISTON	1		
6	13201-324-010	ROD, CONNECTING	1 1		D1,E,F D3,SA,U
	13201-324-020	ROD, CONNECTING	1		D1,E,F
7	13211-324-000	RETAINER, CONNECTING ROD ROLLER	1		
8	13310-324-320	CRANKSHAFT COMP., RIGHT	1		
9	13321-324-310	CRANKSHAFT COMP., LEFT	1		
10	13381-324-000	PIN, CRANK	1		
11	14311-107-000	SPROCKET, TIMING (16T)	1		
12	90451-324-300	WASHER, THRUST, 30MM	1		
13	90741-253-000	KEY, WOODRUFF, 4MM	1		
14	91001-071-000	BEARING, BALL, 6305	1		
15	91011-107-761	BEARING, ROLLER	1		
16	92000-06012	BOLT, HEX., 6X12	1		
17	94601-15000	CLIP, PISTON PIN, 15MM	2		
18	96220-30100	ROLLER, 3X10	26		