TOOLS

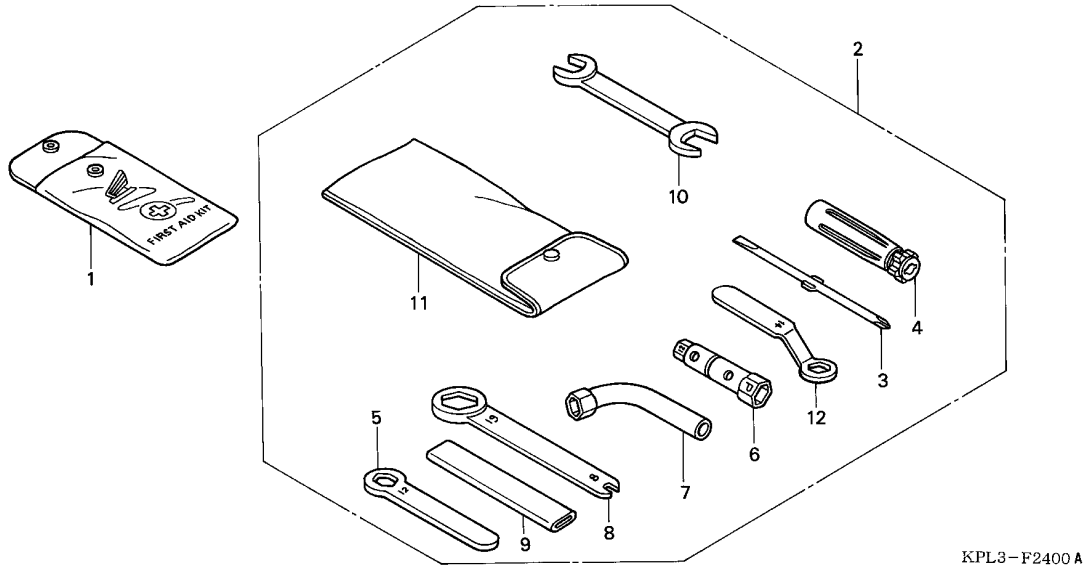

Ref. No.	L.O.N.	(Relative ref. Number) Description	F.R.T.
		NO INFORMATION ----------	

Ref. No.	Part No.	Description	Reqd. QTY SCV100CM 2	5	Serial No.	Parts catalogue code
1	84510-KPL-900	AID KIT, FIRST ----------	1	1		
2	89010-KPL-900	TOOL SET ----------	1	1		
3	89102-KPL-900	DRIVER, SCREW (NO.2 +/-) ----	1	1		
4	89103-KPL-900	GRIP ----------	1	1		
5	89215-KPL-900	HANDLE, EYE WRENCH, 12MM ----	1	1		
6	89216-KPL-900	WRENCH, PLUG (16) ----------	1	1		
7	89217-KPL-900	WRENCH, BOX (14MM) ----------	1	-	-------- --------	MX
			1	-	-------- 28102137	ID
8	89218-KPL-900	WRENCH, EYE, 19MM ----------	1	1		
9	89219-KPL-900	HANDLE, BOX WRENCH ----------	1	-	-------- --------	MX
			1	-	-------- 28102137	ID
10	89225-KPL-900	SPANNER, 10X12 ----------	1	1		
11	99008-01600	BAG, TOOL, 160MM ----------	1	1		
12	89214-KPL-900	WRENCH, EYE, 14MM ----------	1	-	28102138 --------	ID
			-	1		