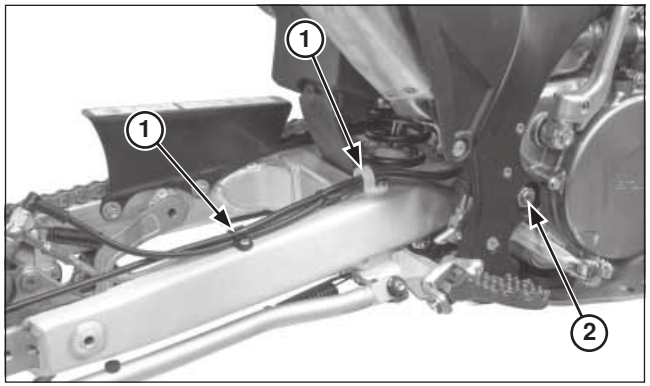

(1) BRAKE HOSE CLAMPS
(2) SWINGARM PIVOT BOLT/NUT

Remove the following:
- Brake hose clamps screws
- Rear brake caliper
- Swingarm pivot bolt/nut and swingarm assembly

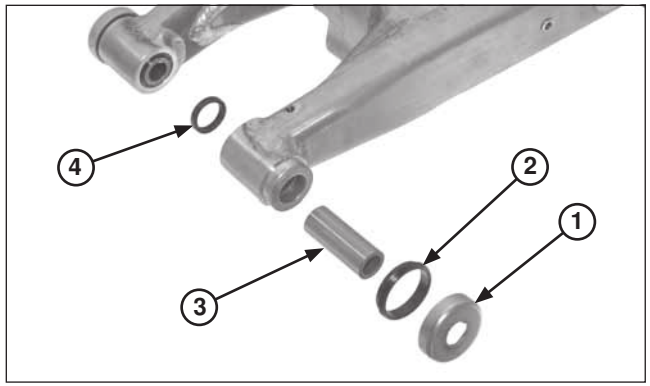

(1) DUST SEAL CAP
(2) DUST SEAL
(3) PIVOT COLLAR
(4) DUST SEAL

Disassembly

Remove the following:
- Bolts and drive chain cover
- Bolts and driven sprocket guard
- Screws and drive chain slider
- Chain tensioner
- Dust seal caps
- Dust seals
- Pivot collars
- Thrust bushings

Replace them if they have score marks, scratches, excessive or abnormal wear.
Check the shock mounts and swingarm for stress, cracks or other damage.

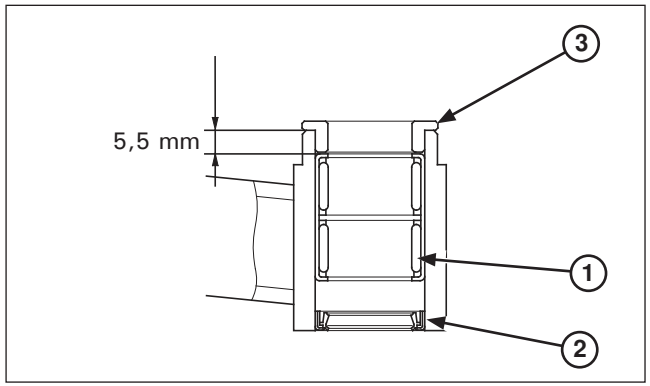

(1) NEEDLE BEARING
(2) DUST SEAL
(3) BUSHING

Pivot Bearing Replacement

Replace the swingarm bearings as a set.

Remove the pivot bearings using the special tool.

Tool:
Bearing driver **07946-KA50000**

Press a new pivot bearing in using the special tools .

Tools:
Driver **07749-0010000**
Attachment, 24 x 26 mm **07746-0010700**
Pilot, 20 mm **07746-0040500**

Face the bearing with its marked side facing out.
Press the needle bearing so that it is 5.5 mm (0.22 in) below the swingarm end.

Install the thrust bushings and the dust seal.