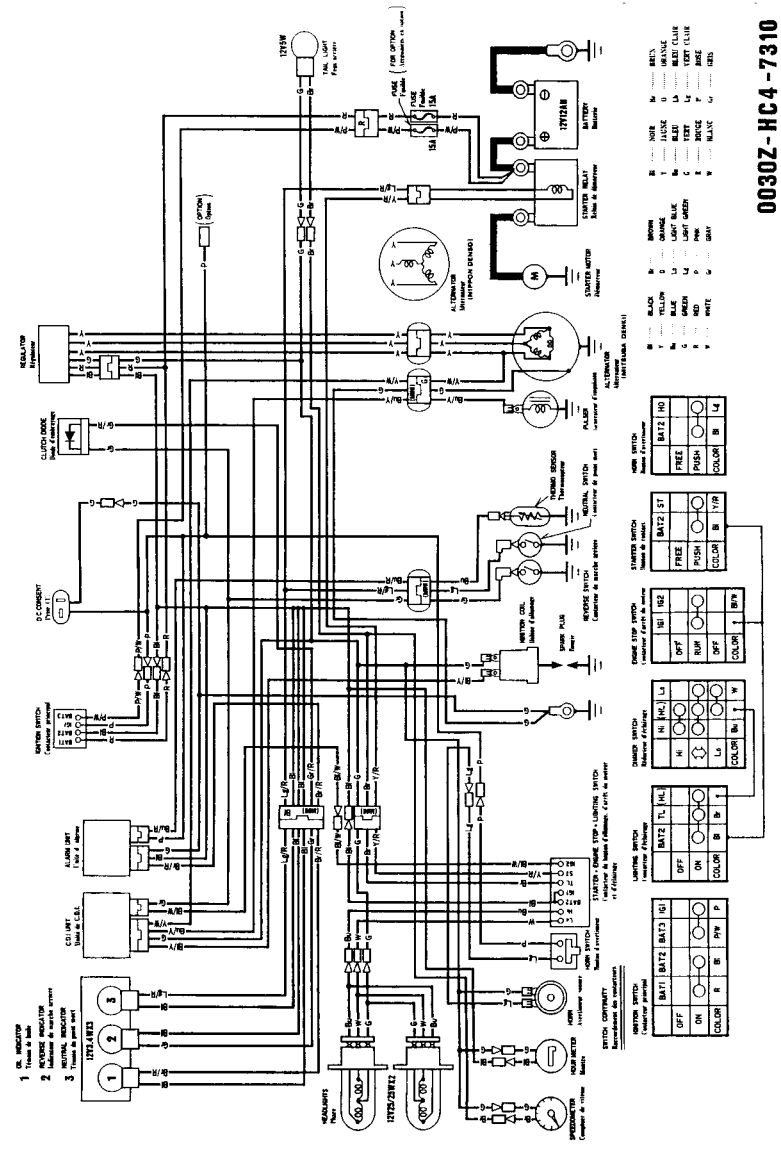WIRING DIAGRAM (Australia model only)