LUBRICATION

ENGINE OIL

Checking Engine Oil Level and Adding Oil

Check the engine oil level each day before operating your FOURTRAX and add oil if needed.

To check the oil level:

1. Make sure the vehicle is on level ground.
2. Start the engine in a well-ventilated area and let it idle for a few minutes.
3. Stop the engine.
4. After a few minutes, remove the oil filler cap/dipstick (Fig. 4-10) from the front crankcase cover and wipe it clean.
5. Insert the dipstick without screwing it in, then remove the dipstick and check the oil level. The oil level should be between the upper level mark (2) and the lower level mark (3) on the dipstick.
6. If required, add the specified oil into the filler cap hole, up to the upper level mark on the dipstick. Do not overfill.
7. Reinstall the oil filler cap/dipstick.

CAUTION:

Running the engine with improper oil level can cause serious engine damage.

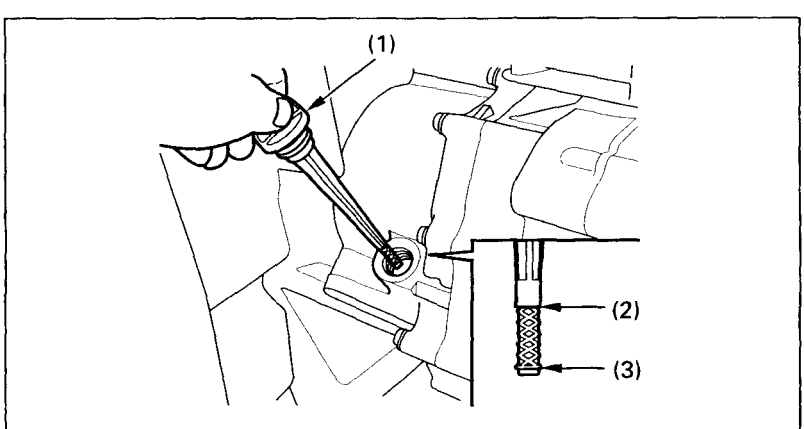

Fig. 4-10 (1) Oil filler cap/dipstick (2) Upper level mark (3) Lower level mark